LifeGard

Document Number: 466-1938 Rev. A
March 2002

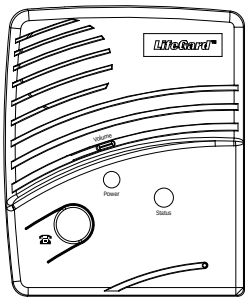

Installation Instructions

Contents

FCC Notices

FCC Part 15 Information to the User

Changes or modifications not expressly approved by GE Interlogix Inc. can void the user's authority to operate the equipment.

FCC Part 15 Class B

This equipment has been tested and found to comply with the limits for a Class B digital device, pursuant to part 15 of the FCC Rules. These limits are designed to provide reasonable protection against interference in a residential installation.

This equipment generates, uses, and can radiate radio frequency energy and, if not installed and used in accordance with the instructions, may cause harmful interference to radio communications. However, there is no guarantee that interference will not occur in a particular installation.

If this equipment does cause harmful interference to radio or television reception, which can be determined by turning the equipment off and on, the user is encouraged to try to correct the interference by one or more of the following measures:

- ❑ Reorient or relocate the receiving antenna.
- ❑ Increase the separation between the equipment and receiver.
- ❑ Connect the affected equipment and the panel receiver to separate outlets, on different branch circuits.
- ❑ Consult the dealer or an experienced radio/TV technician for help.

ACTA Part 68

This equipment complies with Part 68 of the FCC Rules. Located on this equipment is a label that contains, among other information, the FCC registration number and the ringer equivalence number (REN) for this equipment. If requested, this information must be provided to the telephone company.

A plug and jack used to connect this equipment to the premises wiring and telephone network must comply with the applicable FCC Part 68 rules and requirements as adopted by ACTA. A compliant telephone cord and modular plug is provided with this product. It is designed to be connected to a compliant modular jack that is also compliant. See the Installation Instructions for details.

The REN is used to determine the maximum number of devices that may be connected to your telephone line. Excessive RENs on a telephone line may result in devices not ringing in response to an incoming call. In most areas, the sum of all device RENs should not exceed five (5.0). To be certain of the number of devices that may be connected to a line, as determined by the total RENs, contact the local telephone company. For products approved after July 23, 2001, the REN for this product is part of the product identifier that has the format US:AAAEQ##TXXXX. The digits represented by ## are the REN without a decimal point (e.g., 03 is a REN of 0.3). For earlier products, the REN is separately shown on the label.

If this equipment causes harm to the telephone network, the telephone company may temporarily disconnect your service. If possible, you will be notified in advance. When advance notice is not practical, you will be notified as soon as possible. You will also be advised of your right to file a complaint with the FCC.

Your telephone company may make changes in its facilities, equipment, operations, or procedures that could affect the operation of your equipment. You will be given advanced notice in order to maintain uninterrupted service.

If you experience trouble with this equipment, please contact the company that installed the equipment for service and repair information. The telephone company may ask you to disconnect this equipment from the network until the problem has been corrected or you are sure that the equipment is not malfunctioning.

This equipment may not be used on coin service provided by the telephone company. Connection to party lines is subject to state tariffs. Contact the state public utility commission, public service commission or corporation commission for information.

Alarm dialing equipment must be able to seize the telephone line and place a call in an emergency situation. It must be able to do this even if other equipment (telephone, answering system, computer modem, etc.) already has the telephone line in use. To do so, alarm dialing equipment must be connected to a properly installed RJ31X jack that is electrically in series with and ahead of all other equipment attached to the same telephone line. Proper installation is depicted in the figure below. If you have any questions concerning these instructions, you should consult your telephone company or qualified installer about installing the RJ31X jack and alarm dialing equipment for you.

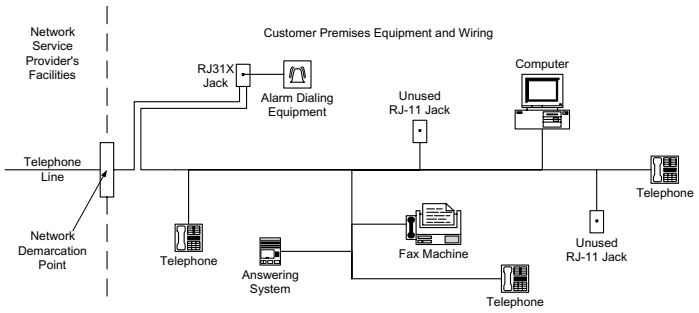

Certification No. B4Z-USA-46042-AL-T

REN:.1B

Canada Notice

The Canadian Department of Communications label identifies certified equipment. This certification means that the equipment meets certain telecommunications network protective, operational, and safety requirements. The department does not guarantee the equipment will operate to the user's satisfaction.

Before installing this equipment, users should ensure that it is permissible to be connected to the facilities of the local telecommunications company. The equipment must also be installed using an acceptable method of connection. In some cases, the company's inside wiring associated with a single-line individual service may be extended by means of a certified connector assembly (telephone extension cord). The customer should be aware that compliance with the above conditions may not prevent degradation of service in some situations.

Repairs to certified equipment should be made by an authorized Canadian maintenance facility designated by the supplier. Any repairs or alterations made by the user to this equipment, or equipment malfunctions, may give the telecommunications company cause to request the user to disconnect the equipment.

For your protection, make sure that the electrical ground connections of the power utility, telephone lines, and internal metallic water pipe system, if present, are connected together.

CAUTION

Do not attempt to make connections yourself. Contact the appropriate electrician or electric inspections authority.

The Load Number (LN) assigned to each terminal device denotes the percentage of the total load to be connected to a telephone loop which is used by the device, to prevent overloading. The termination on a loop may consist of any combination of devices subject only to the requirement that the total of the LNs of all the devices does not exceed 100. Load Number: .1 Certification Number: 867 11636A

"AVI S: - L ´étiquette du ministère des Communications du Canada identifie le matériel homologué. Cette étiquette certifie que le matériel est conforme a certaines normes de protection, d ´ exploitation et de sécurité des réseaux de télécommunications. Le ministère n ´ assure toutefois pas que le matériel fonc-tionnera a la satisfaction de l ´ utilisateur.

Avant d ´ installer ce matériel, l ´ utilisateur doit s ´ assurer qu´ il est permis de le raccorder aux installations de l ´ enterprise locale de télécommunication. Le matériel doit également etre installé en suivant une méthod acceptée de raccordement. Dans certains cas, les fils intérieurs de l´ enterprise utilisés pour un service individuel a ligne unique peuvent etre prolongés au moyen d´ un dispositif homologué de raccordement (cordon prolongateur téléphonique interne). L ´ abonné ne doit pas oublier qu ´ il est possible que la conformité aux conditions énoncées ci-dessus n ´ empechent pas le dégradation du service dans certaines situations. Actuellement, les enterprises de télécommunication ne permettent pas que l ´ on raccorde leur matériel a des jacks d ´ abonné, sauf dans les cas précis prévus pas les tarrifs particuliers de ces enterprises.

Les réparations de matériel homologué doivent etre effectuées pas un centre d ´ entretien canadien autorisé désigné par le fournisseur. La compagne de télé-communications peut demander a l ´ utilisateur de débrancher un appareil a la suite de réparations ou de modifications effectuées par l ´ utilisateur ou a cause de mauvais fonctionnement.

Pour sa propre protection, l ´ utilisateur doit s ´ assurer que tous les fils de mise a la terre de la source d ´ énergie électrique, des lignes téléphoniques et des canalisations d ´´ eau métalliques, s ´ il y en a, sont raccordés ensemble. Cette précaution est particulièrement importante dans les régions rurales.

Avertissment. - L ´ utilisateur ne doit pas tenter de faire ces raccordements lui-meme; il doit avoir recours a un service d ´ inspection des installations élec-triques, ou a electricien, selon le cas".

Une note explicative sur les indices de charge (voir 1.6) et leur emploi, a l ´ intention des utilisateurs du matériel terminal, doit etre incluse dans l ´ information qui accompagne le materiel homologué. La note pourrait etre rédigée selon le modèle suivant:

"L ´ indice de charge (IC) assigné a chaque dispositif terminal indique, pour éviter toute surcharge, le pourcentage de la charge totale qui peut etre raccordée a un circuit téléphonique bouclé utilisé par ce dispositif. La terminaison du circuit bouclé peut etre constituée de n ´ import somme des indices de charge de l ´ ensemble des dispositifs ne dépasse pas 100."

L ´ Indice de charge de cet produit est _____.

interlogix™
SECURITY & LIFE SAFETY GROUP
2266 SECOND STREET NORTH | NORTH SAINT PAUL MN | 800-777-2624 | www.interlogixinc.com

About this Manual

This manual provides advanced information for planning, installing programming and testing a LifeGard system. Complete operation instructions are available in the *LifeGard User Instructions* (Part No. 466-1936). This system is designed to be used as an emergency notification system. Some installations may require configurations dictated by city or state codes, insurance or Underwriter's Laboratories (UL).

Central Station Reporting

The panel has been tested with the following central station receivers using SIA and Contact ID reporting formats:

- ❑ Radionics D6600 Central Station Receiver
- ❑ Sur-Gard Central Station Receiver with models SG-DRL2A and SG-CPM2

System Components

The LifeGard system is composed of the control panel and a wrist and pendant panic.

Control Panel

The control panel is the processing unit for all functions. It receives signals from panic sensors and reports emergencies through the phone line.

When the panel cover is closed, the panel buttons operate the emergency notification system. The user operates the panel by pressing panel buttons. See the *LifeGard User Instructions* for complete operating instructions.

When the panel cover is open, the buttons are used to program the emergency notification system. The panel can be programmed on-site by the installer or user.

Wrist Panic

The Wrist Panic Sensor (60-906-95) is a wireless device designed to be used throughout the installation site. The sensor is worn on the wrist with a wrist strap (included). The panel can be programmed to supervise the Wrist Panic. By default the sensor is not supervised.

Pendant Panic

The Pendant Panic Sensor (60-578) is a wireless device designed to be used throughout the installation site. The sensor can be worn around the neck with a removable cord (included) or on the user's belt with an optional leather belt holster. The panel can be programmed to supervise the Pendant Panic. By default the sensor is not supervised.

Sensor Care

Do not immerse sensors in water. Wipe clean using a soft cloth with a mild detergent.

Repeater

A repeater (60-615-10-319.5) can be added to the LifeGard System in order to boost the range of the panic sensors. See Adding/Replacing Sensors in this manual and the *Repeater Installation Instructions* for information on adding a repeater.

Setting up the System

This section describes how to set up the LifeGard system. Installing the system consists of the following procedures:

- ❑ Find a location for the panel
- ❑ Plug in the phone line
- ❑ Plug in the power
- ❑ Power up the system
- ❑ Adjust the speaker volume

Locating the Panel

The system control panel must be located with access to an incoming phone line and 110 VAC power.

Locate the panel on a table or countertop where it is convenient to use (for example, on a nightstand near a bed).

Locate the panel in a temperature and humidity controlled environment.

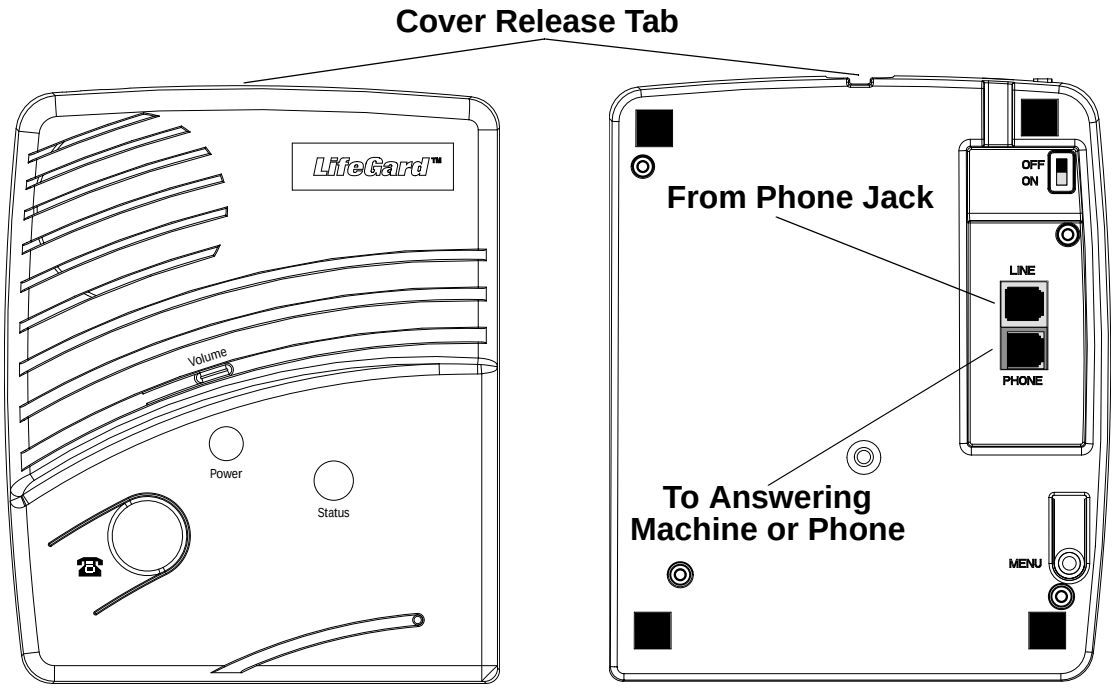

Figure 1. Front and Back of LifeGard system

Plugging in the Phone Line

There are two methods for connecting the panel to a phone line; full line seizure and no line seizure.

Full Line Seizure

This method requires that the panel be wired ahead (or in front) of all other phones, answering machines, computers or any other devices on the phone line. This allows the panel to take over (seize) the phone line, even if another device on the line is in use.

1. Plug in the phone cord to a premises phone jack.
2. Plug the other end to the LINE jack on the back of the panel.
3. Plug additional devices such as phones and answering machines to the PHONE jack on the back of the panel.

No Line Seizure

This method is typically used where DSL (Digital Subscriber Line) service exists. DSL allows multiple devices on a single phone line to be used simultaneously. Simply connecting the panel LINE jack to an available phone jack on the premises using the phone cord is all that is required.

An in-line filter may be required to ensure panel reporting is successful.

> **Note**
> Connecting the panel to a standard phone (voice) line in this manner should be avoided. Other devices in use at the same time the panel is using the line can prevent reports from going through.

Plugging in the Power

The panel is pre-wired for power. Simply plug the transformer into an available 110VAC outlet.

> **Note**
> Make sure the outlet is not controlled by a switch or that it is not part of a ground fault interrupt circuit (GFIC).

Powering up the System

Turn the Power switch on the back of the panel to On. The panel voice should announce “Hello, system X is OK.”

Adjusting the Speaker Volume

The Volume button on the front of the panel controls the volume of announcements from the speaker and the volume during a 2-way talk session.

Adjust the built-in speaker volume using the Volume button on the front of the panel. Each time the Volume button is pressed it increases the speaker volume one level and announces the volume level.

Adjust the volume the same way during a 2-way talk session.

Programming

The LifeGard system can be customized for different installation situations by setting certain options. See the “Programming Options” section of this manual for a descriptions of all the options and their settings.

Programming involves these basic steps:

1. Enter Program Mode
2. Set the Clock
3. Change Access Codes
4. Program Options

Access Codes

There are 3 codes you can use to enter program mode.

Master Access Code

Depending on how Option 28: Access Code Length is set, the default Master Access Code is 123456, 12345, 1234 (factory default), or 123. The Master Access Code can be used to change the following: Options 1, 5, 22, 29 and the Master Access Code. The Master Access Code is also used for the Remote Phone Control options of the LifeGard system. (See “Option 20: Ring/Hang/Ring” and “Remote Phone Operation” in this manual.)

Utility Access Code 1 (Dealer Code)

Depending upon how Option 28: Access Code Length is set, the default utility access code is 654321, 54321, 4321 (factory default), or 321. This code can be used for all programming.

Utility Access Code 2 (Installer Code)

Depending upon how Option 28: Access Code Length is set, the default utility access code is 654321, 54321, 4321 (factory default), or 321. When the system is started for the first time Utility Access Code 2 will have the same privileges as Utility Access Code 1. When the code is changed it can modify all but the following options:
Master Access Code, Utility Access Code 2, Options 3, 4, 7-11 and 28.

Entering Program Mode

1. Open the panel cover by lifting on the tab at the top of the panel. (See Figure 1)
2. Enter the Utility Access Code 1 or 2 using the numbered keys.

The panel is now in program mode. Follow the programming arrows on the panel overlay. The system prompts you through programming steps with beeps and voice messages.

> **Note**
> Do not remove panel power while in program mode. Programming changes are saved only when exiting program mode (closing the cover).

Setting the Clock

1. Press Clock Set from the Start Menu. (The system will announce the programmed time and say “To change, press Hours and Minutes, then press Done.”)
2. Press the Hours + and - buttons and listen to the voice prompts. Stop when panel voice announces the correct hour.
3. Press the Minutes + and - buttons and listen to the voice prompts. Stop when the panel announces the correct minutes.
4. Press Done. The panel announces the set time.

Note
If 6 seconds passes without a key press the panel will announce the time and say “Time is x:xx am/pm, press hours and minutes, then press done or press cancel to quit.”

Changing an Access Code

To change an Access Code:

1. Enter Program Mode.
2. Verify the Access Code Length (Option 28).
3. Press the Add button from the Start Menu.
4. Press the Access Code button until you hear the name of the Access Code you want to change.
5. Press the Done button to select the Access Code.
6. Using the numbered keys, enter the new access code. The panel will repeat the Access Code after the last digit is entered.

Note
Pressing the Cancel button after entering an access code will not revert to the old access code. Go through the steps again if you make a mistake.

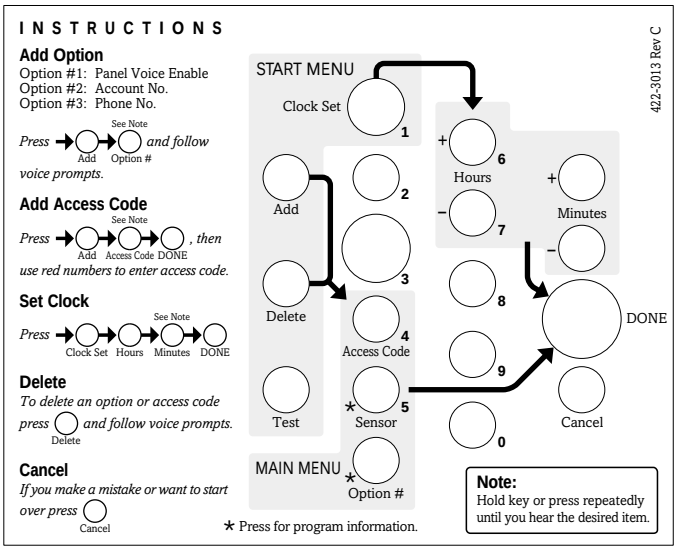

Figure 2. Programming Overlay

Programming Options

These numbered options let you customize system operation according to dealer and user needs.

The Numbered Options Settings table lists all system options and their characteristics. Fill in the last column of the table before programming to help speed up the programming process.

To hear the current setting for each option:

- ❑ Press the Option # button. The panel will announce each option number and setting in order. Press Cancel to stop.
- ❑ To jump to a specific option, press the Option # button, then enter the 2 digit option number using the red numbered keys. The panel will continue to announce the option settings. Press Cancel to stop.

To change an option setting:

- ❑ Press Add or Delete, then press Option # repeatedly until you hear the option you want changed.
- ❑ Press Add or Delete, Option #, then enter the 2 digit option number using the red numbered keys.

Note
Although the panel voice prompts you through programming, it is not necessary to wait for the complete message before pressing the next button in the programming sequence.

Table 1:Numbered Options Settings

#	Function	Default	Range	Desired Setting
1	Panel Voice	On	On/Off	
2	Account Number	00000	0-9, A-F	
3	Primary Phone Number	Off	26 digits	
4	Secondary Phone Number	Off	26 digits	
5	Numeric Pager/ Voice Event Notification Phone Number	Off	26 digits	
6	Call Waiting	Off	26 digits	
7	Downloader Phone Number (Not currently available)	Off	26 digits	
8	Phone Lock	Off	On/Off	
9	Downloader Code (Not currently available)	12345	00000-99999	
10	Phone Mod 1	0	0-3	
11	Phone Mod 2	0	00-10	
12	Numeric Pager/Voice Event Notification Phone Mod 3	10	08-10	
13	DTMF Dialing	On	On/Off	

Table 1:Numbered Options Settings

#	Function	Default	Range	Desired Setting
14	Auto Phone Test	Off	On/Off	
15	RF Timeout	12 Hours	02 to 24 Hours	
16	Manual Phone Test	On	On/Off	
17	AC Power Failure Report	Off	5-254 minutes	
18	CPU Low Battery Report	On	On/Off	
19	Fail to Communicate	On	On/Off	
20	Ring/Hang/Ring	1	1-4, Off	
21	Call Button Enable	1	1, 2, Off	
22	Downloader Enable (Not Currently Available)	On	On/Off	
23	300 Baud	On	On/Off	
24	Audio Verification	On	On/Off	
25	Trouble Beeps	On	On/Off	
26	AVM Mode	Off	On/Off	
27	RF Jam Detect	Off	On/Off	
28	Access Code Length	4	3-6	
29	RF Phone Answer	On	On/Off	
30	Demo Mode	Off	On/Off	
31	Programming Report	Off	On/Off	
32	Supervisory Time	12:00 am	Any time of day	
33	Modem Sensitivity	Off	On/Off	
34	VOX Mic Gain	14	01-64	
35	VOX Gain Range	20	01-64	
36	Manual Mic Gain	64	01-64	
37	VOX Receiver Gain	6	01-10	

Option 1: Panel Voice

Default = On

Lets you prevent the panel from verbally prompting for key press input. This option is ignored when the panel is in program mode.

Option 2: Account Number

Default = 00000

Lets you program up to a 10-character alphanumeric account number (on) or delete, set it to the default, an existing account number (off). Use the numbered buttons to enter numbers. To enter a letter, press the 9 button then use the Minutes + button to program letters A-F.

> **Note**
> If Option 10 and 11 are set to Contact ID do not use the letter A in an account number.

Option 3: Primary Phone Number

Default = None

Lets you program up to a 26-digit central monitoring station receiver phone number for monitored systems (on), or delete an existing primary phone number (off). Use the Add button to enter a * symbol. Use the Delete button to enter a # symbol. Use the Test button to enter a pause.

Option 4: Secondary Phone Number

Default = None

Lets you program up to a 26-digit central monitoring station receiver/numeric pager/voice event notification phone number for monitored systems (on), or delete an existing secondary phone number (off). Use the Add button to enter a * symbol. Use the Delete button to enter a # symbol. Use the Test button to enter a pause.

Option 5: Numeric Pager/Voice Event Notification Phone Number

Default = Off

Lets you program up to a 26-digit phone number for numeric pager or voice event notification (on), or delete an existing phone number (off). Use the Add button to enter a * symbol. Use the Delete button to enter a # symbol. Use the Test button to enter a pause.

Option 6: Call Waiting

Default = Off

Lets you program up to a 26-digit number or code that disables call waiting or any other phone service before dialing central station, pager or voice event notification phone number (on). When this option is turned off, the panel dials only the central station or pager phone numbers.

Option 7: Downloader Phone Number

Default = None

Lets you program up to a 26-digit phone number for a computer modem for using ITI® Toolbox® Downloader (on), or delete an existing phone number (off).

> **Note**
> Downloader is not currently supported.

Option 8: Phone Lock

Default = Off

Prevents resetting of phone/reporting related to Options 3, 4, 7-11 and Utility Access Code 1 when a memory clear is performed (on), or resets all options to their default values when a memory clear is performed (off).

Option 9: Downloader Code

Default = 12345

Lets you set a unique 5-digit code that is required for initiating ToolBox sessions (on) or sets the code to its default (off).

The code must be 5 digits long and can range from 00000 to 99999. The Downloader Code must match the downloader access code in the ToolBox account to perform ToolBox sessions.

> **Note**
> The Downloader Code should always be changed from the default setting to avoid competitor theft.
> Downloader is not currently supported

Option 10: Phone Mod 1

Default = 0

Determines what (content) and how (format) the panel should report through the primary phone number (Option 3), if one is programmed. Table 2 describes the choices.

Table 2:Phone Mod 1 Settings

Setting	Content	Format
0	All	SIA
1	All	Contact ID
2	Alarms Only	SIA
3	Alarms Only	Contact ID

Option 11: Phone Mod 2

Default = 00

Determines the what (content) and how (format) the panel should report through the secondary phone number (Option 4), if one is programmed. Table 3 describes the choices. All Entries must be 2 digits.

Table 3:Phone Mod 2 Settings

Setting	Content	Format
00	All	SIA
01	All	Contact ID
02	Alarms Only	SIA
03	Alarms Only	Contact ID
04	Non-Alarms Only	SIA
05	Non-Alarms Only	Contact ID
06	Phone 1 Failure	SIA
07	Phone 1 Failure	Contact ID
08	AC Power Restorals/ Failures	Pager
09	Same as 08 plus Alarms	Pager
10	Alarms only (See Options 5 and 12)	Voice Event Notification

Option 12: Numeric Pager/Voice Event Notification Phone Mod 3

Default = 10

Determines what (content) and how (format) the panel should report through a Numeric Pager/ Voice Event Notification Phone Number (Option 5), if one is programmed. Table 4 describes the choices. All entries must be 2 digits.

Table 4:Phone Mod 3 Settings

Setting	Content	Format
08	AC Power Restorals/ Failures	Numeric pager
09	Same 08 plus Alarms	Numeric Pager
10	Alarms Only	Voice Event Notification

Option 13: DTMF Dialing

Default = On

Determines whether the panel uses DTMF (on) or pulse (off) for dialing programmed phone numbers.

Option 14: Auto Phone Test

Default = Off

Determines whether the panel automatically performs a periodic phone test.

The test interval can be from 001 to 254 days. Entries must be 3 digits. The time of day the panel performs the test is determined by Option 32: Supervisory Time, which must be turned on for this feature to work.

Option 15: RF Timeout

Default = 12 Hours

Determines the time period within which the panel must receive at least one supervisory signal from a learned sensor before identifying a sensor failure for that sensor and sounding trouble beeps. Any sensor failure is reported immediately and again at the supervisory time (Option 32: Supervisory Time). See “Sensor Supervisory Failure” in the System Operation section for more information.

The Timeout can be set from 02 to 24 hours. Entries must be 2 digits.

> **Note**
> Setting this feature to 2 hours may cause false reports.

Option 16: Manual Phone Test

Default = On

Determines whether the user can perform a manual phone test to verify communication to a central station/pager (on), or not (off).

Option 17: AC Power Failure Report

Default = Off

Determines whether the panel sends AC Power failure reports to a central station or pager after the programmed time period expires (on), or not (off).

For the first 30 seconds the panel is without AC Power, the panel LED’s turn off. When the panel is without AC Power for the programmed time, an AC power failure is reported. The AC Power Failure Report time period can be set from 5 to 254 minutes. Entries must be 3 digits. The panel reports an AC power restoral when AC power returns to the panel.

Option 18: CPU Low Battery Report

Default = On

Determines whether the panel sends a low CPU battery report to the central station when the panel backup battery voltage drops below 5.4 volts (on) , or not (off).

A CPU Low Battery Report is also sent at the time specified by Option 32: Supervisory Time. When the backup battery is restored and a sensor test is performed a system battery restoral report will be sent to the central station.

> **Note**
> If a sensor test is not performed, no report will be sent and the panel's status LED will continue to blink.

Option 19: Fail to Communicate

Default = On

Determines whether the panel sounds trouble beeps if it is unable to successfully send a report to a central station or pager (on), or not (off).

> **Note**
> The panel will try each programmed phone number 8 times before announcing a system phone communication failure.

Option 20: Ring/Hang/Ring

Default = 1

Determines when the panel answers a remote phone access call. Depending on whether an answering machine exists at the panel location, off-site access to the panel can be done with a series of phone calls or just one.

Table 5 shows the available settings.

Table 5: Ring/Hang/Ring Settings

Setting	Control Panel answers after:
1	ring/hang/ring or 10 rings
2	ring/hang/ring/hang/ring or 10 rings
3	ring/hang/ring/hang/ring/hang/ring or 10 rings
4	10 rings
Off	Disabled - no remote (off-site) access

For off-site access where an answering machine does not exist, the user simply calls the panel location once and listens for 10 rings. The panel should answer after the tenth ring.

For off-site access where an answering machine exists, the user must perform the following steps:

1. Call the panel location.
2. Let the Phone ring once, then hang up.
3. Wait at least 10 seconds but not more than 40, then call the panel location again. The panel should answer on the first ring.

- ❑ If set to 1, perform steps 1-3 once.
- ❑ If set to 2, perform steps 1-3 twice.
- ❑ If set to 3, perform steps 1-3 three times.

See “Phone Communication” in the Testing the System section of this manual for the commands used for remote phone control.

Option 21: Call Button Enable

Default = 1

Determines how the panel’s Call button activates alarms. When set to 1, a single press of the Call button will activate an alarm. When set to 2, pressing the Call button twice or pressing and holding the Call button will activate an alarm. Delete will disable the Call button.

Option 22: Downloader Enable

Default = On

Determines whether the panel can be accessed using ToolBox (on), or not (off).

> **Note**
> Downloader is not currently supported.

Option 23: 300 Baud

Default = On

Determines whether the baud rate used by the panel for central station or ToolBox communications is 300 bps (on) or 110 bps (off).

Option 24: Audio Verification

Default = On

Determines whether the system can perform 2-way voice audio sessions with a central station operator (on), or not (off).

> **Note**
> Panel voice announcements are silenced during audio sessions. If the operator does not terminate the session correctly, panel announcements may not occur and the Menu button on the back of the panel will be disabled for up to 4 minutes 30 seconds after the operator hangs up.
> If this option is off, Option 26: AVM Mode will not work.

Option 25: Trouble Beeps

Default = On

Determines whether the panel sounds six beeps every minute when a trouble condition occurs (on) or not (off) The following conditions cause trouble beeps:

- ❑ AC Power Failure
- ❑ Low CPU Battery
- ❑ Sensor Failure (supervisory)
- ❑ Sensor Trouble (low battery or tripped tamper)
- ❑ Fail to communicate
- ❑ RF Jam

Trouble beeps can be silenced by pressing the Status button. Trouble beeps resume 4 hours later if the trouble condition is not cleared.

Option 26: AVM Mode

Default = Off

Determines whether the panel hangs up and waits for a call-back from the central station operator before starting an audio session (on) or stays on line with the central station for an instant audio session (off).

> **Note**
> Option 24: Audio Verification must be on for this feature to work.
> Option 26 affects the primary phone number only.

Option 27: RF Jam Detect

Default = Off

Determines whether the panel checks for and reports RF interference/jam to the central station (on), or not (off).

If this option is on and the panel receives a constant 319.5 MHz signal, the panel announces “RF interference detected” when the Status button is pressed and reports the condition to the central station. If this option if off, the panel does not detect an RF jam.

> **Note**
> The panel will not detect RF Jams for 4 hours after a memory clear.

Option 28: Access Code Length

Default = 4

Determines how many digits are in each access codes.

This option lets you set the access code length to 3, 4, 5 or 6 digits. Turning off (deleting) this option resets access code length and all access codes to their default.

Read the following before changing this option.

- ❑ This option affects all access codes.
- ❑ Changing the access code length resets the Master, Utility 1 and Utility 2 access codes to their respective defaults as described in Table 6.

Note
If the customer wants the Access Code Length changed, it should be set before programming any new (unprogrammed) access codes, whenever possible.

Table 6:Access Code Length Defaults

Setting	Default Code
3	Master - 123 Utility 1 - 321 Utility 2 - 321
4	Master - 1234 Utility 1 - 4321 Utility 2 - 4321
5	Master - 12345 Utility 1 - 54321 Utility 2 - 54321
6	Master - 123456 Utility 1 - 654321 Utility 2 - 654321

Option 29: RF Phone Answer

Default = On

When this option is on pressing a panic button will answer a ringing phone. Pressing it again will hang-up the phone.

Note
If a different panic than the one used to answer the phone is used to hang-up the phone, the panel will disconnect and go into alarm.

Option 30: Demo Mode

Default = Off

Determines whether the panel operates as a demonstration model (on) or a standard panel (off).

Turning on this feature disables low battery supervision.

Option 31: Programming Report

Default = Off

Determines whether the panel sends a report to the central station anytime the programming mode is entered/exited (on) or not at all (off).

The panel sends a report whenever the dealer (Utility 1) or installer (Utility 2) code is used to enter programming mode and another report is sent when the programming session ends (when the cover is closed). The report is also sent when the Menu button on the back of the panel is used to add a sensor.

Option 32: Supervisory Time

Default = 12:00 am

Determines the time of day the panel reports supervisory conditions (sensor failures), system low battery, sensor low battery and automatic phone tests to the central station.

> **Note**
> The panel clock must be set to the correct time for this option and Option 14: Auto Phone Test to work correctly.

Option 33: Modem Sensitivity

Default = Off

Determines whether the modem sensitivity is set to normal (off) or high (on).

> **Note**
> This feature should be used only if the panel experiences consistent trouble reporting to the central station. Otherwise, leave this option off.

Option 34: VOX Mic Gain

Default = 14

Sets the mic gain (sensitivity) when using voice-activated switching (Speaker Phone).

Room size, acoustics and furnishings where the panel is located will influence the setting. The available settings are 01 (low) to 64 (high). Entries must be 2 digits.

Option 35: VOX Gain Range

Default = 20

Sets the gain range for the voice-activated switching (VOX). The available setting are 01 (low) to 64 (high). Entries must be 2 digits. For correct performance this option should be set equal to or greater than Option 34: VOX Mic Gain.

> **Note**
> This option works in conjunction with Option 34: VOX Mic Gain. It is important to follow the setting recommendations as described to achieve acceptable operation.

Option 36: Manual Mic Gain

Default = 64

Determines the mic gain level (sensitivity) during 2-way audio sessions, when manually switching between listen and talk.

Room size, acoustics, and furnishings where the panel is located will influence the setting. The available settings are 01 (low) to 64 (high). Entries must be 2 digits.

Option 37: VOX Receiver Gain

Default = 6

Determines the receiver gain level during 2-way audio sessions.

If the VOX is switching the speaker on when the central station operator is not talking, lower both this setting and Option 34: VOX Mic Gain. If the VOX is not switching the speaker on when the central station operator is talking, raise this setting and lower Option 34: VOX Mic Gain.

> **Note**
> Changing this setting does not affect speaker volume.

This option can be set from 01 to 10. Entries must be 2 digits.

Exiting Programming Mode

To exit programming mode and save the changes simply reattach the panel cover.

When you close the cover, the panel reverts to the operating mode. The control panel speaker beeps once.

> **Note**
> At any time during programming you can reattach the cover and the changes made to the system will be saved. When you are ready to continue programming, remove the cover and re-enter an access code.

Resetting Memory to Defaults

If it becomes necessary to reset panel programming to the defaults, perform the following steps:

1. Turn the ON/OFF switch on the back of the panel to OFF.
2. Open the panel cover.
3. Turn the ON/OFF switch to ON while pressing the Done, 0 and Test buttons. Hold the button until the panel announces “Hello, system X OK.”
4. Release the buttons.

> **Note**
> If Option 8: Phone Lock is on, Options 3, 4, 7-11 and Utility Access Code 1 will not reset to their defaults.

System Operation

The main function of the LifeGard system is to respond to the pendant and wrist panic or the panel's Call button.

System Monitoring

The LifeGard system constantly monitors system conditions to ensure proper operation.

AC Power

The panel's Power LED will remain lit if AC power is ok. If the AC power is not detected for 6 seconds or more, the following occurs:

1. The panel turns off the power LED.
2. After 4 minutes, a non-reporting AC fail report will be placed in the event buffer.
3. If Option 25: Trouble Beeps is enabled, six trouble beeps will sound once a minute.

   Note
   If Status is pressed during an AC power failure the system will announce "AC power failure."

4. After the AC Power Failure Report time (Option 17) expires the panel reports an AC power failure message to the central station.

When AC Power is restored for more than 2 seconds:

1. The panel sends a AC power restoral message to the central station if an AC failure message was sent. If an AC failure message was not sent, the panel places the AC restoral message in the event buffer as a non-reporting event.
2. Power LED lights up.
3. Trouble beeps stop.

Backup Battery

If the rechargeable backup battery reaches the low battery threshold during a battery test or if operating on battery backup during an AC failure, the following occurs:

1. The panel sends a CPU low battery report to the central station if Option 18: CPU Low Battery is enabled.
2. If Option 25: Trouble Beeps is enabled, trouble beeps sound.

   Note
   If Status is pressed during a CPU low battery, the system will announce "Time is x:xx, system low battery."

When the low battery condition is fixed, and a sensor test is performed, the system sends a CPU low battery restoral report to the central station if Option 18: CPU Low Battery is on.

Replacing the Backup Battery

To replace the backup battery:

1. Turn the ON/OFF switch on the back of the panel to OFF.
2. Remove the battery cover screw and cover. (See Figure 3)

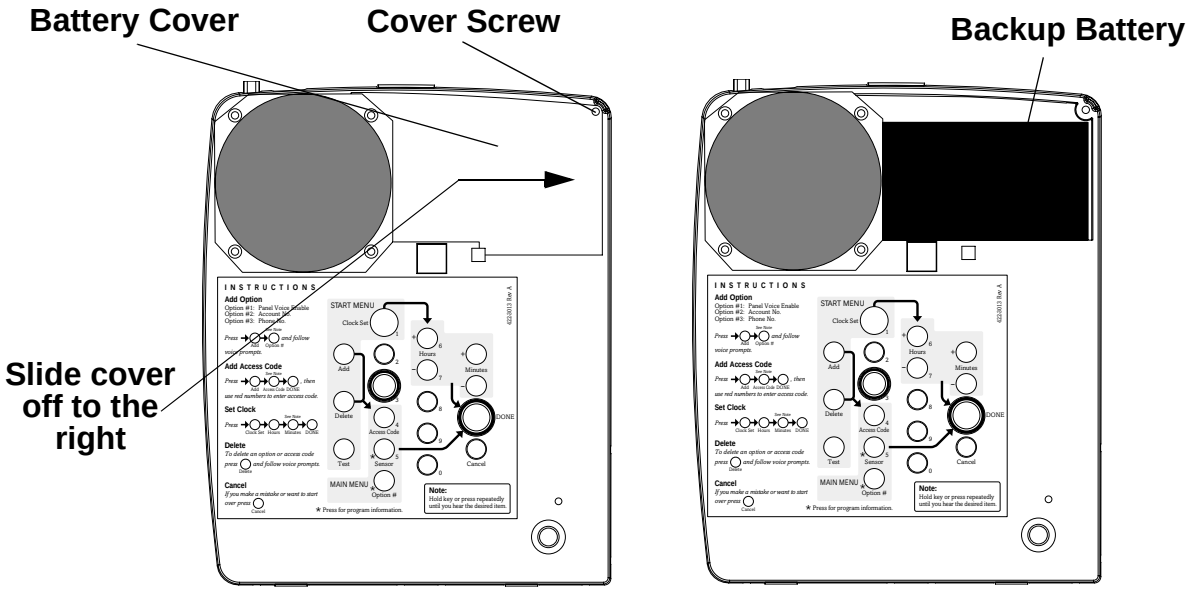

Figure 3. Replacing the backup battery

3. Remove the old battery. It may be necessary to loosen the two screws on the right side of the speaker.

   Note
   Lifting the panel and tilting it toward yourself should aid in the removal of the battery.

4. Install the new battery, positioning it under the edge of the speaker.
5. Tighten the speaker screws.
6. Replace the battery cover.
7. Replace and tighten the cover screw.

Sensor Low Battery

If the panel gets a low battery message from a sensor, the following occurs:

1. The panel sends a Sensor Low Battery report to the central station.
2. The Status LED lights.
3. If Option 25: Trouble Beeps is enabled, trouble beeps sound once a minute.

   Note
   If Status is pressed during a sensor low battery, the system announces “Time is x:xx, sensor X panic, low battery.” Trouble beeps resume after 4 hours if the condition is not fixed.

When the low battery condition is fixed, the panel stops the trouble beeps and turns off the Status LED. See the sensor’s manual for information on replacing its battery.

Sensor Supervisory Failure

If the panel does not hear from a sensor within the programmed RF Timeout (Option 15) the following occurs:

1. The panel sends a Sensor Supervisory Failure report to the central station.
2. The Status LED lights.
3. If Option 25: Trouble Beeps is enabled, trouble beeps sound once a minute.

> **Note**
> If Status is pressed during a sensor supervisory failure, the system announces “Time is x:xx, sensor X panic, failure.” Trouble beeps resume after 4 hours if the condition is not fixed.

When the sensor supervision failure is fixed, the panel stops the trouble beeps and turns off the Status LED.

Automatic Phone Test

The panel verifies its ability to contact the central station every 1 to 254 days, depending on how Option 14: Auto Phone Test is set. If the Auto Phone Test fails to contact the central station, the following occurs:

1. The Status LED lights.
2. If Option 25: Trouble Beeps is enabled, trouble beeps sound.

> **Note**
> If Status is pressed during an Auto Phone Test Failure, the system announces “Time is x:xx, system phone communications failure.” Trouble beeps resume after 4 hours if the condition is not fixed.

Basic Operation

To activate a portable panic sensor:

- ❑ Wrist Panic - Press the button until its red LED blinks.
- ❑ Pendant Panic - Press and hold the button for 2 seconds.

To activate the panel's Call button:

Depending on how Option 21 (Call Button Enable) is set, the Call button operates with a single press or two presses. If Option 21 is set to off, the panel's Call button cannot be used to initiate an emergency call.

Single Press - Option 21 set to 1:

1. Press the Call button.
2. The system announces "Contacting monitoring station, please remain calm."

Note
There may be a slight delay between the time the button is pressed and when the panel announces it is contacting the station.

Two Presses - Option 21 set to 2:

1. Press the Call button once. The panel announces "Press call again for Emergency call, or press Status to cancel."
2. Press the Call button again to initiate an emergency call or press Status to cancel the call.

You may also initiate an emergency call by holding down the Call button for 5 seconds or until the system announces "Contacting monitoring station, please remain calm."

After initiating a call the panel will...

- ❑ start blinking the Status LED.
- ❑ dial the central station
- ❑ announce "Contacting monitoring station, please remain calm."

Note
This message will be repeated every 60 seconds until contact is made with the central station or there is a communication failure. The panel will try each programmed phone number 8 times. If the panel fails to make contact it will go into communication failure.

- ❑ report an alarm to the central station.
- ❑ begin a 2-way audio session between the resident and the central station operator if the system is set up for 2-way audio. This depends on Options 24 and 26.

Adding/Replacing Sensors

LifeGard allows up to 24 panic sensors to be learned into the system. There are two methods for adding a panic sensor to the system. Use the first method to add a standard sensor. Use the second method if you need to change the group number of the sensor - such as when the sensor must be supervised.

> **Note**
> Use these general instructions for adding a repeater to the LifeGard system. A repeater counts as one of the 24 sensors that can be learned into the system.

To add or replace a panic sensor using the Menu button on the back of the panel:

1. Press the Menu button on the back of the panel until the panel announces “Add sensor. Press Status to select.”

   > **Note**
   > Pressing the Menu button cycles through 4 functions; Phone Test, Sensor Test, Add Sensor and Delete all Sensors. The panel will announce the current function each time the button is pressed.

2. Press the Status button on the front of the panel. This puts the panel into Learn Mode for 8 seconds.
3. Trip the panic sensor. The panel will announce “Press status to accept panic sensor X.”

   > **Note**
   > If a sensor is not heard within 8 seconds the panel will announce “cancelled” and the program sequence will be aborted.
   >
   > See the *Repeater Installation Instructions* for complete instructions on “tripping” (learning) a repeater. The voice announcement from the panel will differ if adding a repeater.

To add or replace a panic sensor using the programming buttons:

1. Open the front cover.
2. Enter the Utility 1 or Utility 2 Access Code.
3. Press the Add button from the Start menu. The panel announces “Select from Main Menu.”
4. Press Sensor from the Main Menu. The panel will announce “Press button on panic sensor X.” X is the next available sensor number. If 24 sensors are already programmed into the panel the panel says “Invalid. Twenty-four sensors already programmed.”

   > **Note**
   > The sensor number can be changed during program mode by pressing the numbered keys after pressing the sensor’s button. Sensors can be numbered 01 to 24. Be sure to enter 0 before the number for sensor numbers 1 to 9. The sensor number cannot be changed after it has been programmed.

5. Trip the sensor. If the sensor is not already programmed into the panel, the panel says “Press Done to accept panic sensor X group 1.” If the sensor has already been programmed, the panel says “Invalid sensor, already programmed as sensor X.” If the sensor is not supported by LifeGard the panel says “Invalid sensor type.”
6. If necessary, change the group number assigned to the sensor by pressing the Option # button (After pressing the button on the panic sensor). The panel will announce “Press Done to accept panic sensor X group 0.” Pressing the Option # button again will change the group number back to 1. Panic sensors can be assigned to Group 0 or 1.
7. Press the Done button to program the sensor. The system will announce “Sensor X panic, group Y programmed.”

Deleting Sensors

You can delete a single sensor or all sensors at once.

To delete a single sensor:

1. Open the front cover.
2. Enter the Utility 1 or Utility 2 Access Code.
3. Press the Delete button. The panel announces “Select from Main Menu.”
4. Press Sensor from the Main Menu. The panel says “Sensor X panic. Press Sensor again for next sensor or done to delete.”

   Note
   If no sensors have been learned into the panel the panel says “Function not available” after the sensor’s button is pressed.

5. Press the Sensor button until the panel announces the number of the sensor you wish to delete.
6. Press the Done button to delete the sensor.

To delete all sensors:

1. With the front cover closed, press the Menu button on the back of the panel until the panel announces “Delete all sensors. Press status to delete all sensors.”

   Note
   Pressing the Menu button cycles through 4 functions; Phone Test, Sensor Test, Add Sensor and Delete all Sensors. The panel will announce the current function each time the button is pressed.

2. Press the Status button on the front of the panel to delete all sensors. The panel says “All sensors deleted.”

Testing the System

This section describes how to perform the following test procedures:

- ❑ Panic Test
- ❑ Phone Communication

Panic Test

We recommend that you test the panics after all programming is completed and whenever a panic-related problem occurs.

1. Press the Menu button on the back of the panel until the panel announces “Sensor test. Press Status to select.”

   Note
   Pressing the Menu button cycles through 4 functions; Phone Test, Sensor Test, Add Sensor and Delete all Sensors. The panel will announce the current function each time the button is pressed.

2. Press the Status button on the front of the panel to start a sensor test. The panel announces “Sensor test is on, test sensor 1.”
3. Press and hold the appropriate panic button for 3 seconds.
4. The system will continue to prompt for panics that have not yet been tested. When all the sensors have been tested the panel will announce, “Sensor test complete, press status.”
5. Press Status. The panel says “Sensor test OK.”

   Note
   The panel will prompt for each sensor in the order they were programmed. If there are no sensors programmed the panel says “Function not available.”

Phone Communication

Perform phone tests to check the programmed phone numbers, off-site phone operation and phone communication between the panel and the central station.

Phone Test

To test the programmed phone numbers:

1. Press the Menu button on the back of the panel once. The panel announces “Phone test. Press Status to select.”
2. Press the Status button on the front of the panel. The panel says “Phone test is on” once a minute while the phone test is being completed.
3. If all phone numbers are dialed successfully the panel says “Phone test OK.” If no phone numbers are successfully dialed the panel says “System phone communications failure.” The panel will attempt each phone number 8 times.

   Note
   If you don’t get the phone test option, verify a phone number (Options 3, 4, 5) is programmed and Manual Phone Test (Option 16) is on.

Remote Phone Operation

Test the system from a remote (off-site) phone using the commands in Table 7. See “Option 20: Ring/Hang/Ring” in the Programming section for information on connecting to LifeGard from a remote phone. After a successful Ring/Hang/Ring, Press ⊠ + Master Access Code + a Phone Command number from Table 7.

Table 7: Remote Phone Operation

System Function	Phone Command
Talk	0 or 1
2-Way Conversation	2
Listen	3 or C
Terminate Session	9 9

Pager Communication

Use the following table to determine what the numeric message is reporting.

Table 8:Pager Reporting Message

Report	Pager Display
Phone Test	-101-101
AC Power Restoral	-102-102
AC Power Failure	-103-103
Call Button Panic	-107-107
Wrist or Pendant Panic	-108-108

Voice Event Notification

Testing this feature requires two people; one at the installation site and the other at the location the panel is programmed to call (Option 4 and/or 5).

> **Note**
> If the system is monitored by a central station, contact them first before activating any sensors to avoid a false alarm.

1. Contact the central monitoring station (if system is monitored) to inform them you are testing the system and not to dispatch help.
2. At the system site, activate a portable panic or press the system's Call button.
3. At the calling location, pick up the phone after it starts ringing. You should hear the panel voice announce "Press star for alarm."
4. Press ⊠ on the phone and the panel voice announces "Time is x:xx, sensor xx panic alarm."

   > **Note**
   > After the panel has announced the alarms it says "Press star for alarm" again. To hear the alarms again press ⊠. To end the call go to step 5.

5. After listening to the alarm information, press ⊠ to terminate the call.

   > **Note**
   > You must terminate the call by pressing ⊠. Otherwise the panel may not disconnect from the phone line for up to 2 minutes.

6. At the system site, press the Status button to clear the status message. The panel will announce the time and the alarm.

   > **Note**
   > If you press the Status button before the panel has delivered the Voice Event Notification the system clears the alarm message and only the time will be announced.

Central Station Communication

To test communication with the central station:

1. Call the central station and tell the operator you will be testing the system.
2. Test each of the panic buttons to verify they are working correctly.
3. When you finish testing the system, call the central station to verify that the alarms were received.

Troubleshooting

Table 9:Troubleshooting Guide

Problem	Solution
The system does not respond when the Call button or panic button are activated.	❑ Verify the phone line is plugged into the LINE jack in the back of the panel. ❑ Make sure the Primary Phone Number (Option 3) is programmed. ❑ Make sure Option 21: Call Button Enable is set to 1 or 2.
I can't select an option number I need to change.	❑ Be sure you have entered Utility Access Code 1 or Utility Access Code 2. The Master Access Code can only change Options 1, 5, 22 and 29
I don't get the phone test option when I press the Menu button on the back of the panel.	❑ Make sure a Phone Number (Option 3-5) is programmed. ❑ Make sure Manual Phone Test (Option 16) is on.
The system is beeping.	❑ Press the Status button. ❑ Refer back to this table or the System Operation section for information on correcting the problem.
The system is announcing "System phone communications failure."	❑ Verify the phone line is connected correctly. ❑ Verify a Phone Number (Option 3-5) is programmed correctly.
The system is announcing "System low battery."	❑ Make sure the battery is fully charged and connected properly. ❑ Replace the backup battery. ❑ Perform a sensor test.
I performed a sensor test and the panel announces "Function not available."	❑ The sensor(s) has been deleted or not programmed into the system. ❑ Follow the instructions for Adding/Replacing sensors.
The system is announcing "Sensor low battery."	❑ Replace the sensors battery. Refer to the sensor's manual for battery replacement instructions.
My access code doesn't work.	❑ The Access Code Length may have been changed. Try using one of the default codes from Table 6.